POWERED BY DUALSKY

Dimensions

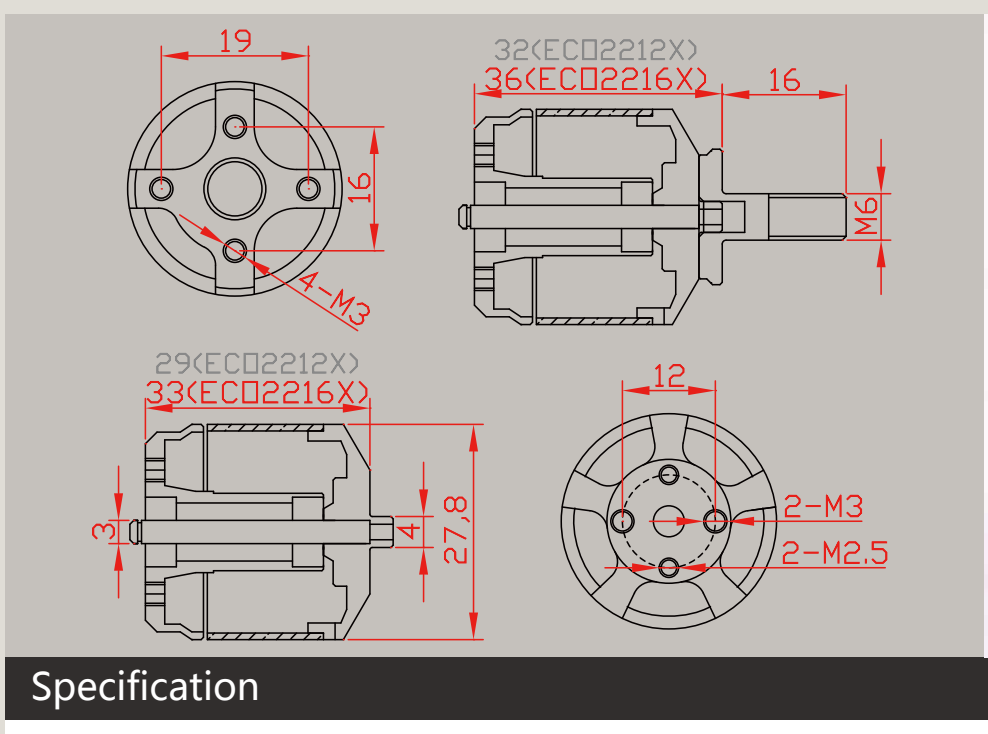

Specification

ECO-X Series	ECO 2216X		
Item NO. (商品编码)	51383	51384	51385
RPM/V(KV) (KV值)	1300	880	750
Weight w/o wire(g)(重量)	62	62	62
Dimensions(mm,ODxL) (尺寸)	28x33	28x33	28x33
Mounting holes pitch (安装孔距)	16&19	16&19	16&19
Input wire (线规格)	20AWG, 400mm	20AWG, 400mm	20AWG, 400mm
Poles (槽极数)	12N14P	12N14P	12N14P
Idle Current(Io) @10V(A) (空载电流)	0.9	0.6	0.4
Resistance(Ri)(mOhm) (电阻)	61	118	158
Peak power(W)[15s] (峰值功率)	205	198	176
Bursts current(A)[15s] (最大电流)	18.4	13.4	11.9
Cruising power(W)[8+mins] (巡航功率)	113	109	97
Propeller(No. of Cell, Prop.) (螺旋桨配置)	3S, 9x5, 10x5	3S, 9x5, 10x5, MRP11x5.5 4S, 8x5, 9x5	4S, 8x5, 9x5, MRP10x5.5
Recommended ESC (调速器)	XC-301-MR	XC-301-MR	XC-301-MR
Max. weightof quad-copter(kg) (4轴重量)	1.4	1.4	1.2
Max. weightof hex-copter(kg) (6轴重量)	1.9	1.8	1.6

ECO 2216X (1300KV)

Motor @ Optimum Efficiency
最佳效率

Current(电流):	11.76A
Voltage(电压):	10.01V
Revolutions(转速):	11720rpm
Electric Power(输入功率):	117.8W
Mech. Power(输出功率):	101.4W
Efficiency(效率):	86.1%

① el. Power [in 1W]
②Efficiency [%]
③max. Revolutions [in 100rpm]
④waste Power[W]
⑤Motor Case Temp. [°C]

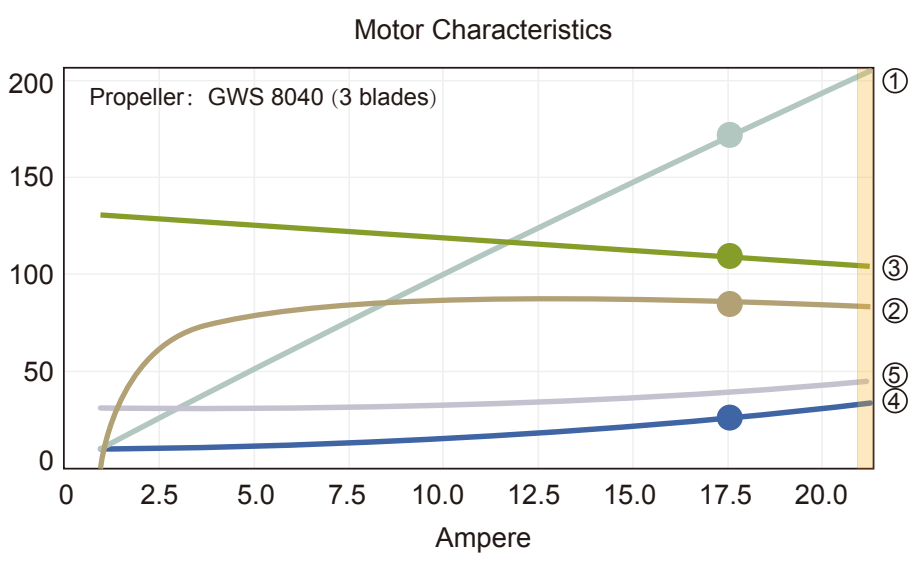

Voltage (V) 工作电压	Propeller 螺旋桨	Throttle(%) 油门	Thrust(g) 拉力	Ampere(A) 电流	Power(W) 功率	g/W 效率	RPM 转速
11.1V (3S LIPO)	APC 8045MR	50%	400	5.9	65.9	6.1	7877
		60%	500	7.7	84.9	5.9	8451
		70%	580	9.3	102.9	5.6	9077
		85%	750	13.5	149.9	5.0	10277
		100%	930	18.5	204.8	4.5	11442
	APC 9045MR	50%	490	6.8	75.9	6.5	6985
		60%	600	8.7	96.9	6.2	7628
		70%	700	11.2	123.9	5.7	8348
		85%	950	17.2	190.8	5.0	9728
		100%	1170	23.0	254.7	4.6	10500
	GWS 8040 (3 blades)	50%	400	5.6	61.9	6.5	8382
		60%	470	6.8	75.9	6.2	9034
		70%	520	8.2	90.9	5.7	9625
		85%	710	11.4	126.9	5.6	10842
		100%	890	15.7	173.8	5.1	12068
	MRP-9	50%	410	5.8	64.2	6.4	7688
		60%	500	7.2	80.2	6.2	8365
		70%	570	8.8	98.1	5.8	9085
		85%	780	12.9	143.4	5.4	10362
		100%	970	17.6	195.3	5.0	11442

ECO 2216X (880KV)

Motor @ Optimum Efficiency
最佳效率

Current(电流):	8.93A
Voltage(电压):	13.25V
Revolutions(转速):	10410rpm
Electric Power(输入功率):	118.4W
Mech. Power(输出功率):	100.4W
Efficiency(效率):	84.8%

① el. Power [in 1W]
②Efficiency [%]
③max. Revolutions [in 100rpm]
④waste Power[W]
⑤Motor Case Temp. [°C]

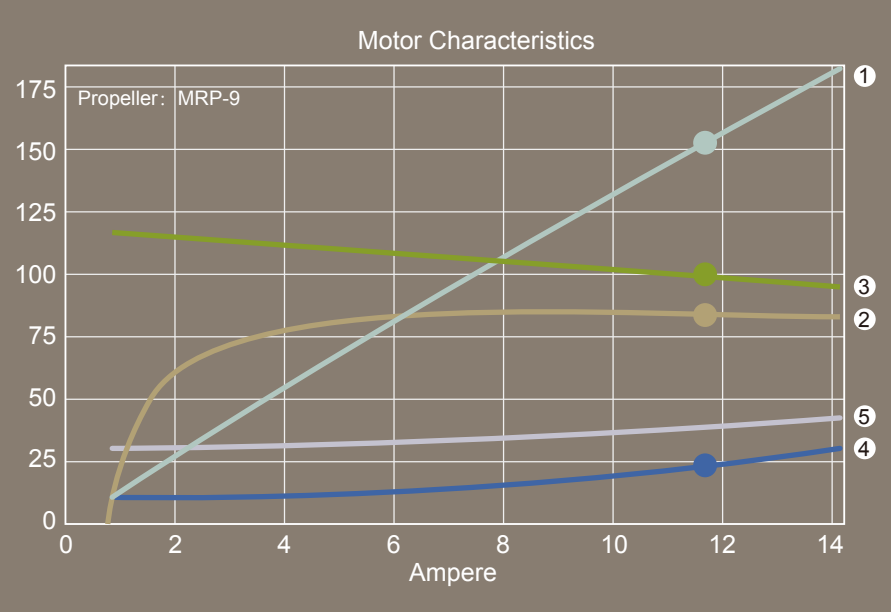

Voltage (V) 工作电压	Propeller 螺旋桨	Throttle(%) 油门	Thrust(g) 拉力	Ampere(A) 电流	Power(W) 功率	g/W 效率	RPM 转速
11.1V (3S LIPO)	APC 9045MR	50%	330	2.9	32.0	10.3	5391
		60%	370	3.7	41.0	9.0	5854
		70%	410	4.3	48.0	8.6	6420
		85%	580	6.8	74.9	7.7	7474
		100%	740	9.4	103.9	7.1	8228
	GWS 9050 (3 blades)	50%	310	3.0	33.0	9.4	5228
		60%	380	3.8	42.0	9.1	5682
		70%	450	4.9	53.9	8.3	6222
		85%	630	7.6	83.9	7.5	7140
		100%	790	10.5	116.9	6.8	8031
	APC 1145MR	50%	410	3.5	39.0	10.5	4517
		60%	520	4.9	53.9	9.6	5048
		70%	640	6.8	75.9	8.4	5691
		85%	830	10.0	110.9	7.5	6462
		100%	1030	13.7	151.8	6.8	7157
14.8V (4S LIPO)	GWS 8040 (3 blades)	50%	330	3.2	48.0	6.9	7868
		60%	400	4.1	59.9	6.7	8528
		70%	480	4.9	71.9	6.7	9068
		85%	630	6.8	99.9	6.3	10294
		100%	780	9.4	138.5	5.6	11391
	APC 8045MR	50%	350	3.5	51.9	6.7	7388
		60%	430	4.4	65.3	6.6	8014
		70%	500	5.4	79.9	6.3	8545
		85%	660	8.0	118.5	5.6	9874
		100%	860	11.2	165.2	5.2	10988
	MRP-9	50%	410	3.6	53.3	7.7	7251
		60%	480	4.6	67.9	7.1	7902
		70%	560	5.7	83.9	6.7	8528
		85%	750	8.3	122.5	6.1	9737
		100%	920	11.3	167.8	5.5	10885
	APC 9045MR	50%	430	4.0	58.6	7.3	6668
		60%	520	5.1	75.9	6.8	7251
		70%	640	6.8	99.9	6.4	7971
		85%	850	10.2	150.5	5.6	9240
		100%	1080	14.1	209.1	5.2	10148

ECO 2216X (750KV)

Motor @ Optimum Efficiency
最佳效率

Current(电流):	6.42A
Voltage(电压):	13.71V
Revolutions(转速):	9233rpm
Electric Power(输入功率):	88W
Mech. Power(输出功率):	75.5W
Efficiency(效率):	85.8%

① el. Power [in 1W]
②Efficiency [%]
③max.Revolutions [in 100rpm]
④waste Power[W]
⑤Motor Case Temp. [°C]

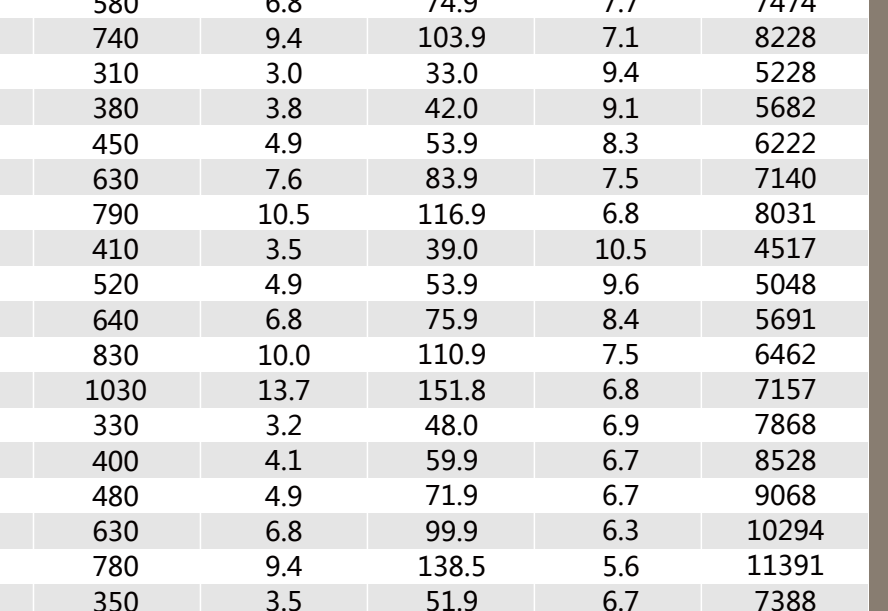

Voltage (V) 工作电压	Propeller 螺旋桨	Throttle(%) 油门	Thrust(g) 拉力	Ampere(A) 电流	Power(W) 功率	g/W 效率	RPM 转速
14.8V (4S LIPO)	APC 8045MR	50%	290	2.4	36.0	8.1	6634
		60%	360	3.1	45.3	7.9	7054
		70%	410	3.5	51.9	7.9	7577
		85%	530	5.1	75.9	7.0	8682
		100%	680	7.1	105.2	6.5	9702
	APC 9045MR	50%	360	2.8	41.3	8.7	6034
		60%	430	3.5	51.9	8.3	6471
		70%	500	4.4	65.3	7.7	7071
		85%	680	6.8	101.2	6.7	8177
		100%	860	9.3	137.2	6.3	9077
	GWS 9050 (3 blades)	50%	360	3.0	44.0	8.2	5802
		60%	420	3.8	55.9	7.5	6180
		70%	500	5.0	74.6	6.7	6720
		85%	710	7.7	113.2	6.3	7877
		100%	880	10.9	161.2	5.5	8708
	MRP-10	50%	390	3.0	44.0	8.9	5794
		60%	470	3.8	55.9	8.4	6282
		70%	560	4.8	70.6	7.9	6814
		85%	740	7.5	110.6	6.7	7928
		100%	950	10.4	153.2	6.2	8828

2014 All Copyrights Reserved by DUALSKY.COM